花样缝电脑平缝机

Computerized special stitch pattern lockstitch sewing machine

使用说明书

Operation instruction

重要安全事项

为使您正确使用我们的产品，须对产品的各种功能充分了解，以便安全操作。使用前请仔细阅读使用说明书。我们希望您能长期愉快地使用我们的产品，请保存好说明书，以备查阅。

1. 使用此缝纫机时，必须遵守包括如下项目的基本安全措施。
2. 使用此缝纫机之前，请阅读本使用说明书在内的所有指示文件。
   同时应将此使用说明书妥善保管，以便能够随时查阅。
3. 此缝纫机应与贵国的有关安全规定一起使用。
4. 使用此缝纫机和缝纫机动作中，所有的安全装置应安装到规定的位置。
   没有安装规定的安全装置的缝纫机禁止使用。
5. 此缝纫机应由接受过培训的操作人员来操作。
6. 使用缝纫机时，建议戴安全防护眼镜。
7. 发生下列情况时，应立即关掉电源开关，或拔下电源插头。
   7-1 机针、弯针、分离器等穿线和更换旋梭时。
   7-2 更换机针、压脚、针板、弯针、分离器、送布牙、护针器、支架向导器等时。
   7-3 修理时。
   7-4 工作场所无人了或离开工作场所时。
8. 缝纫机以及附属装置使用的机油、润滑脂等液体流入眼睛或沾到皮肤上时，或被误饮时，应立即清洗有关部分并去医院治疗。

9. 禁止用手触摸打开了缝纫机开关通电的零件或装置。
10. 有关缝纫机的修理、改造、调整应由受过专门训练的技术人员或专家进行。
11. 一般的维修保养应由受过训练的人员来进行。
12. 有关缝纫机的电气方面的修理、维修应由资格的电气技术人员或专家的监督和指导下进行。
13. 修理、保养有关空气、气缸等压缩空气的零件时，应切断空气压缩机供气源后再进行。如有残留压缩空气时，应放掉压缩空气。
14. 缝纫机在其使用其间应定期清扫。

15. 为了正常安全运转，应安装地线。同时应在不受高频焊接机等强噪音源影响的环境下使用。
16. 电源插头应用具有电气专门知识来安装。电源插头必须连接到接地插座上。

17. 缝纫机指定用途以外不能使用。
18. 对缝纫机的改造、变更应符合安全规格，并采取有奖的安全措施。
    另外，对于有关改造和变更，公司概不负责。

19. 本使用说明书上采用以下2个警告符号。

⚠ 有损伤操作人员、维修人员的危险。

⚠ 安全上需要特别加以注意的事项。

IMPORTANT SAFETY INSTRUCTIONS

To get the most out of the many functions of this machine and operate it in safety, it is necessary to use this machine correctly. Please read this instruction Manual carefully before use. We hope you will enjoy the use of your machine for a long time.Please remember to keep this manual in a safe place.

1.Observe the basic safety measures, including, but not limited to the following ones, whenever you use the machine.
2.Read all the instructions,including, but mot limited to this Instruction Manual before you use the machine. In addition, keep this Instruction Manual so that you read it at anytime when necessary.
3.Use the machine after it has been ascertained that it conforms with safety rules/standards valid in your country.
4.All safety devise must be in position when the machine is ready for word or in operation.
The operation without the specified safety devices is not allowed.
5.This machine shall be operated by appropriately-trained operators.
6.For your personal protection, we recommend that you wear safety glasses.
7.For the following, turn off the power switch or disconnect the power plug of the machine from the receptacle.
7-1 For threading needle(s), looper, spreader etc. And replacing bobbin.
7-2 For replacing part(s) of needle, presser foot, throat plate, looper, spreader,feed dog ,needle guard, folder, cloth guide ect.
7-3 For repair work.
7-4 When leaving the work place or when the working place is unattended.
8.If you should allow oil, grease, etc. Use with the machine and devices to come in contact with your eyes or skin or swallow any of such liquid by mistake, immediately wash the contacted areas and consult a medical doctor.

9.Tampering with the live parts and devices, regardless of whether the machine is powered, is prohibited.
10.Repair, remodeling and adjustment works must only be done by appropriately trained technicians or specially skilled Personnel. Only spare parts designated by can be used for repairs.
11.General maintenance and inspection works have to be done by appropriately trained personnel.
12.Repair and maintenance works of electrical components shall be conducted by qualified electric technicians or under the audit and guidance of specially skilled personnel.
13.Before making repair and maintenance works on the machine equipped with pneumatic parts such as an air cylinder,he air compressor has to be detached from the machine and the compressed air supply has to be cut off.Existing residua lair pressure after disconnecting the air compressor from the compressed air supply has to be expelled. Exceptions to this are only adjustments and performance checks done by appropriately trained technicians or specially skilled personnel.
14.Periodically clean the machine throughout the period of use.

15.Grounding the machine is always necessary for the normal operation of the machine. The machine has to be operated in an environment that is free from strong noise sources such as high-freauency welder.
16.An appropriate power plug has to be attached to the machine by electric technicians. Power plug has to be commected to a grounded receptacle.

17.Grounding the machine is always necessary for the normal operation of the machine. The machine has to be operated in an environment that is free from strong noise sources such as high-freauency welder.
18.An appropriate power plug has to be attached to the machine by electric technicians. Power plug has to be commected to a grounded receptacle.

19.Warming hints are marked with the two shown symbols.

⚠ Danger of injury to operator or service staff

⚠ Items requiring special attention

安全操作事项 FOR SAFE OPERATION

危险 DANGER

1. 为了防止发生触电事故，请不要再打开电源的状态下，打开电气箱盖以及触摸电气箱内的零件。
1.To avoid electrical shock hazards, neither open the cover of the electrical box for the motor nor touch the components mounted inside the electrical box.

注意 CAUTION

1. 为了防止人身事故的发生，请不要再卸下电机罩、手指防护器等安全装置的状态下运转缝纫机。
2. 为了防止被卷入机器的人身事故，缝纫机运转中请不要将手指、头发、衣服靠近手轮、也不要把东西放到机器上面
3. 为了防止人身事故的发生，打开电源时以及缝纫机运转中，请不要把手指放到机针附近。
4. 为了防止人身事故的发生，缝纫机运转中请不要反手指放到挑线杆外罩内。
5. 缝纫机操作中，旋梭高速地旋转。为了防止手受到伤害，运转中请绝对不要把手靠近旋梭。
6. 为了防止人身事故的发生，放到缝纫机或返回原来位置时，要注意不要夹住手。
7. 为了防止突然的起动造成人身事故，放到缝纫机时，请一定关掉电源。
8. 使用伺服电机时，缝纫机停止电机无声音。为了防止意外的起动造成人身事故，请注意不要忘记关电源。
9. 为了防止触电事故，卸下电源地线的状态，请不要运转缝纫机。
10. 为了防止触电和损坏电气零件，拔电源的插头时，请先关掉机器电源开关。
1.To avoid personal injury, never operate the machine with any of the belt cover, finger guard or safety devices removed.
2.To prevent possible personal injuries caused by being caught in the machine, keep your fingers, head and clothes away from the handwheel, V belt and the motor while the machine is operation. In addition, place nothing around them.
3.To avoid personal injury, never put your hand under the needle when you turn "ON"the power switch or operate the machine.
4.To avoid personal injury, never put your fingers into the thread take-up cover while the machine is operation.
5.The hook rotates at a high speed while the machine is in operation. To prevent possible injury to hands, be sure to Beep your hands away from the vicinity of the hook during operation. In addition, be sure to turn OFF the power to the machine when replacing the bobbin.
6.To avoid possible personal injuries, be careful not to allow your fingers in the machine when tilting/raising the machine head.
7.To avoid possible accidents because of abrupt start of the machine, turn OFF the power to the machine when tilting the machine head.
8.If your machine is equipped with a servo-motor does not produce noise while the machine when tilting the machine head.
9.To avoid electrical shock hazards, never operate the sewing machine with the ground wire for the power supply removed.
10.To prevent possible accidents because of electric shock or damaged electrical components(s), turn OFF the power switch in prior to the connection/disconnection of the power plug.

运转缝纫机前的注意事项 BEFORE OPERATION

注意 CAUTION 为了防止机械错误动作或损伤，请确认如下项目。
To avoid malfunction and danage of the machine,confirm the folloeing.

- 最初使用缝纫机之前，请把机器打扫干净。
- 清除运送中积存的灰尘，并加油。
- 请确认电压是否正确。
- 请确认电源插头是否正确接连。
- 电压规格不同时，请绝对不要使用。
- 缝纫机的转动方向是，站在飞轮侧看为逆时针方向。请注意不要让缝纫机反向转动。

- Before you put the machine into operation for the first time after the set up, clean it thoroughly.
- Remember all dust gathering during transportation and oil it well.
- Confirm that the power plug has been properly connected to the power supply.
- Never use the machine in the state where the connected to the power supply.
- The direction of rotation of the sewing machine is counterclockwise as observed from the handwheel side.Be careful not to rotate it in reverse direction.

1 . 缝纫机规格 MACHINE SPECIFICATIONS

		M	H
用途 USE		薄料、中厚料 Medium-weight materials	厚料 Heavy-weight materials
最高缝纫速度 Max.Sewing speed		5,000 sti/min	4,000 sti/min
最大针距 Max.Stitch speed		5mm	7mm
压脚高度 Presser foot height	压脚扳手 Lifting lever	6mm	6mm
	自动 automatic	6-10mm 可调（Adjustable)	6-10mm 可调（Adjustable)
送布牙高度 Feed dog height		1.0mm	1.2mm
机针（DB×1，DP×5）Needle		#9-#18	#19-#22
润滑油		10号白油 No.10 white oil	

2-1. 台板加工图 Table processing diagram

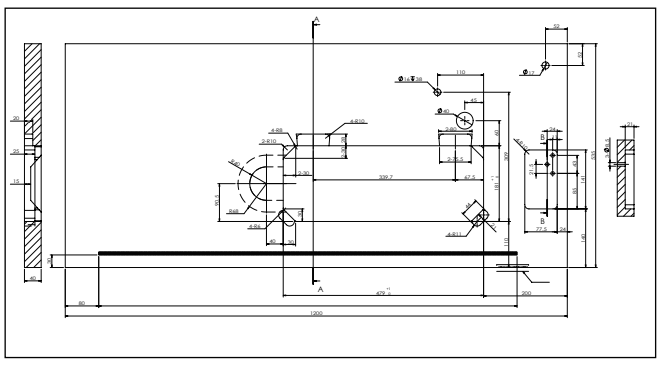

2-2. 安装方法 Installation

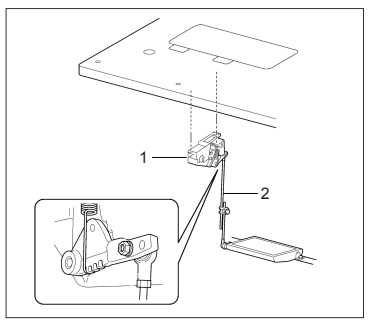

1.调速器
1.Governor

2.连杆
2.Connecting rod

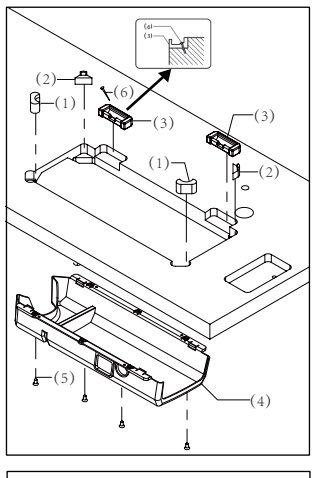

3. 安装
（1）头部防震垫（大）（2个）
（2）头部防震垫（小）（2个）
（3）铰链套（2个）
（4）托盘
（5）螺钉（4个）
（6）钉（8个）
3. Install
(1) Head cushinons(big)[2 pcs]
(2) Head cushions(small)[2 pcs]
(3) Rubber cushions[2 pcs]
(4)Tray
(5) Screw [4 pcs]
(6) Nail [8 pcs]

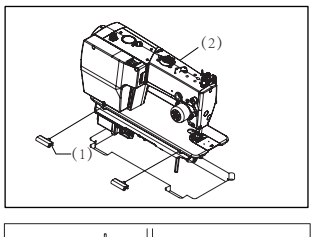

4. 缝纫机头部
（1）机头铰链（2个）
（2）缝纫机头部

4. Machine head
(1) Hinges [2 pcs]
(2) Machine head

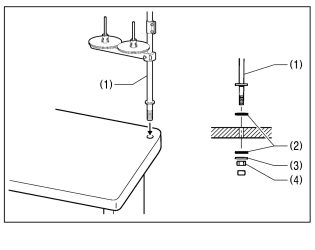

5. 线架
（1）线架
注意：将螺母（4）拧紧以便将两个橡皮垫片（2）和垫圈（3）夹紧，使线架（1）固定。
5. Cotton stand
(1)Cotton stand
NOTE:
Securely tighten the nut(4) so that the two rubber cushions(2) and the washer(3) are securely clamped and so that the cotton stand(1) does not move.

3. 加油方法 Lubrication

⚠ 注 意 CAUTION

在加油未完成前，请勿插上电源。
当误踩下踏脚板时，缝纫机动作会导致人员受伤。

使用润滑油时，请务必戴好保护眼镜和保护手套等，以防润滑油落入眼中或沾在皮肤上，这是引起发炎的原因。
另外，润滑油不能饮用，否则会引起呕吐和腹泻。
将油放在儿童拿不到的地方。

在剪去油罐的油嘴口时，请一定要拿住油嘴的根部。
如果拿住油嘴口，剪刀容易伤到手，成为受伤的原因。

Do not connect the power cord until lubrication has been completed, otherwise the machine may operate if the treadle is depressed by mistake, which could result in injury.

Be sure to wear protective goggles and gloves when handling the lubricating oil and grease, so that they do not get into your eyes or onto your skin, otherwise inflammation can result.
Furthermore,do not drink the oil or eat the grease under any circumstances, as they can cause vomiting and diarrhea.
Keep the oil out of the reach of children.

When cutting the nozzle of the oil tank, hold the base of the nozzle securely.
If you hold the end of the nozzle, injury from the scissors may result.

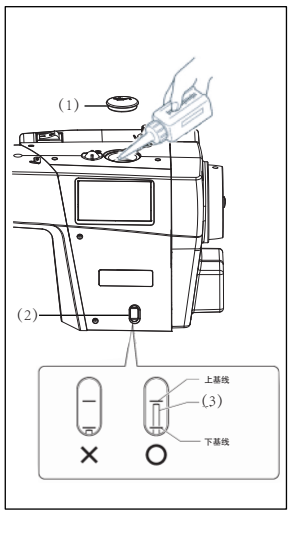

初次使用缝纫机前需添加机油以保证机器各部机械部件的润滑，以延长机器寿命

1. 将加注机油孔塞（1）打开
2. 将白油注入机头加油口中
3. 加油过程中观察油量视窗（2），使油量计（3）稳定在上、下基线之间
注：油量计不可超过视窗上基线

如油量计（3）低于下基线，则必须添加机油

Before the first time use this sewing machine, you need to add oil to ensure the lubrication of the mechanical parts of the machine,to prolong the service life of the machine

1. open the oil rubber（1）
2. add oil into the machine
3. look at the oil window (2) during adding oil,to make the oil guage (3) is steable between the top and bottom baselines
Note: the oil guage can't be over the top baseline in the window

If the oil gauge (3) is lower than the buttom baseline,machine must be added oil

4. 面线的穿法 THREADING THE UPPER THREAD

⚠ 注 意 CAUTION

在穿线过程中，请切断电源。当误按动起动开关时，缝纫机动作会导致人员受伤。
Turn off the power switch before threading the upper threadl.
The machine may operate it the treadle is depressed by mistake,which could ressult in injury.

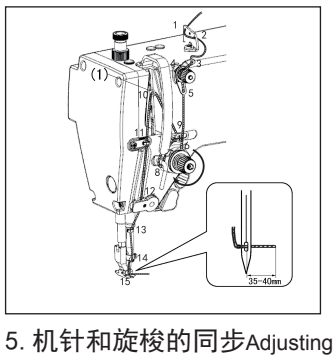

・在穿引面线之前转动手轮，抬高挑线杆（1）。这样会使穿引更加容易，并防止面线在缝纫开始时脱落

·Turn the machine pulley and raise the thread take-up(1) before threading the upper thread.
This will make threading easier and it will prevent thethread from coming out at the sewing start.

5. 机针和旋梭的同步Adjusting the needle and rotary hook timing

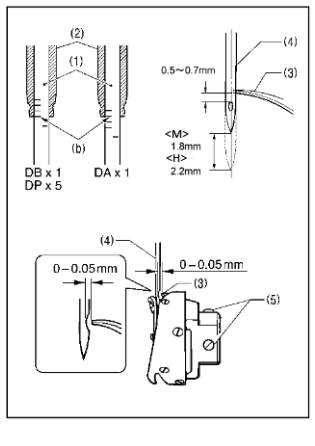

当针杆（1）从最低位置向上移动1. 8mm（2. 2mm用于M和H规格），到达基线（b）与针杆轴套（2）下端对齐的位置时，旋梭尖端（3）应与机针中心（4）对齐，如图所示。

（此时，针孔上边缘与旋梭尖的距离为0. 5至0. 7mm。）
1. 转动缝纫机手轮，使针杆（1）从最低位置上升到如图所示的基线（b）与针杆轴套（2）的下端保持对齐为止。
2. 旋松固定螺钉（5）[3个]，使旋梭尖（3）与机针（4）的中心一致。
此时，旋梭尖（3）与机针（4）之间的间隙为0 ～ 0. 05mm
3. 拧紧固定螺钉（5）[3个]。

The tip of the rotary hook (3) should be aligned with the center of the needle (4) when the needle bar (1) moves up 1.8mm (2.2mm for -M and -H specifications) from its lowest position to the position where reference line (b) is aligned with the lower edge of the needle bar bush (2) as shown in the illustration.
(The distance from the upper edge of the needle hole to the rotary hook tip will be 0.5 to 0.7mm at this time.)
1.Turn the machine pulley to raise the needle bar (1) from its lowest position until reference line (b) is aligned with the lower edge of the needle bar bush D (2) as shown in the illustration.
2.Loosen the set screws (5), and then align the tip of the rotary hook (3) with the center of the needle (4).
The distance between the tip of the rotary hook (3) and the needle (4) should be approximately 0-0.05mm.
3. Securely tighten the set screws (5).

6. 踏板的调整 ADJUSTMENT OF THE PEDAL

注意
为了防止意外的起动造成的事故，请关掉电源后进行。
WARNING:
Turn off the power before starting the work so as to prevent accidents caused by abrupt start of the sewing machine.

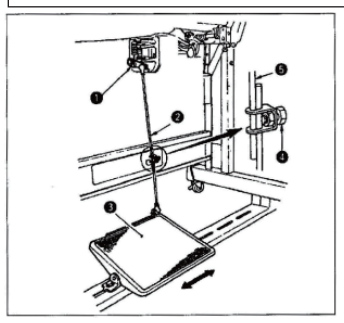

（1）连接杆的安装
1）向箭头方向移动踏板调节板③，让踏板拨杆①和连接杆②呈一直线。
（2）踏板的角度
1）调节连接杆的长度就可以自由地改变踏板的倾斜角度。
2）拧松调节螺丝④，拉出插入连接杆⑤进行调整。
(1) Installing the connecting rod
1) Move pedal ③ to the right or left as illustrated by the arrow so that motor control lever ① and connecting rod ② are straightened.
(2) Adjusting the pedal angle
1) The pedal tilt can be freely adjusted by changing the length of the connecting rod.
2) Loosen adjust screw ④ , and adjust the length of connecting rod ⑤。

踏板操作 ／PEDAL OPERATION

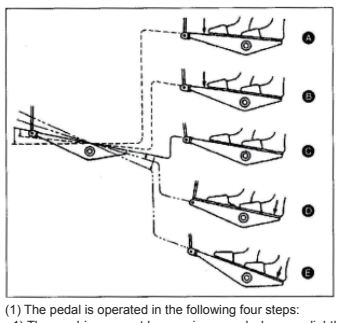

(1) 踏板按4个阶段进行操作。
1）向前轻轻踩踏板为低速缝制Ⓑ。
2）再用力向前踩踏板则变为告诉缝制Ⓐ（但是，开关设定为自动倒缝时，倒缝结束后进行高速缝制）
3）把踏板返回到脚轻轻地放到踏板上的位置缝纫机停Ⓒ 。（机针上停止或下停止位置）
4）用力向后踩踏板则为切线动作Ⓔ。
＊ 使用自动压脚提升装置时，再停止和切线之间增加1级开关。向后轻轻的踩踏板为压脚提升动作Ⓓ，再往后用力踩踏板为切线动作。

(1) The pedal is operated in the following four steps:
1) The machine runs at low sewing speed when you lightly depress the front part of the pedal Ⓑ .
2) The machine runs at high sewing speed when you lightly depress the front part of the pedal Ⓐ .
(If the automatic reverse feed stitching has been preset, the machine runs at high speed after it completes reverse feed stitching)
3) The machine stops (with its needle up or down) when you reset the pedal to its original position Ⓒ .
4) The machine trims threads when you fully depress the back part of the pedal Ⓔ .
* If your machine is provided with the Auto-lifter an addition step is given between the machine stop and thread Trimming step. The presser foot goes up when you lightly depress the back part of the pedal Ⓓ, and if you further depress the back part, the thread trimmer is actuated.

7. 标准调整 STANDARD ADJUSTMENT

注 意

- 只有经过训练的技术人员才能进行缝纫机的维修，保养和检查。
- 与电气有关的维修、保养和检查请委托购买商店或电气专业人员进行。
- 取下的安全保护装置，再次安装时，请务必安装在原位上，并检查能否正常的发挥作用。
- 缝纫机头倒下或竖起时，请用双手进行操作。单手造作时因缝纫机的重量万一滑落易导致受伤。
- 发生下列情况时，请关闭电源。并拔下电源插座。否则误踩下踏脚板时，缝纫机动作会导致受伤。
  ・ 检查、调整和维修
  ・ 更换旋梭，切刀等易损零部件
- 在必须接上电源开关进行调整时，务必十分小心遵守所有的安全注意事项。

CAUTION

- Maintenance and inspection of the sewing machine should only be carried out by a qualified technician.
- Ask your DUMA dealer or a qualified eledtrician to carry out any maintenance and inspection of the electrical system.
- If any safety devices have ben removed, be absolutely sure to re-install them to their origin positions and check that they operate correctly before using the machine.
- Secure the table so that it will not move when tilting back the machine head. If the table moves, it may crush your feet or cause other injuries.
- Use both hands hold the machine head when tilting it back or returning it to its original position. If only one hand is used, the weight of the machine head may cause your hand to slip, and your hand may get caught.
- Turn off the power switch and disconnect the power cord form the wall outlet at the following times, otherwise the machine may operate if the treadle is depressed by mistake, which could result in injury.
  ·When carrying out inspection, adjustment and maintenance
  ·When replacing consumable parts such as the rotary hook and knife

7-1. 机壳线导向R Adjusting arm thread guide R

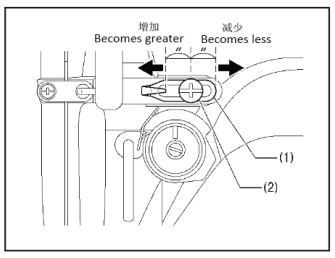

机壳线导向R(1)的标准安装位置是在螺钉（2）位于机壳线导向R（1）的可调范围中心处。

[注意]
旋松螺钉（2），移动机壳线导向R（1）进行位置的调节。
・当缝纫厚料时，向左移动机壳线导向R（1）。（挑线量增加。）
・当缝纫厚料时，向左移动机壳线导向R（1）。（挑线量减少。）

The standard position of arm thread guide R（1）is the position where the screw（2）is in the center of the adjustable range for arm thread guideR（1）.
To adjust the position, loosen the screw（2）and then move arm thread guide R（1）.
·When sewing thick material, move arm thread guide R（1）to the left.（The thread take-up amount will become greater.）
·When sewing thin material, move arm thread guide R（1）to the right.（The thread take-up amount will become less.）

7-2. 送布牙的高度

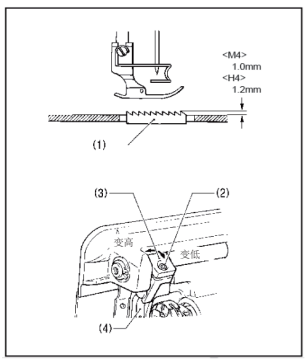

当送布牙（1）被尽量提高到针板表面之上时，其标准高度为1.0mm（用于M规格）和1.2mm（用于H规格）。

1. 回转缝纫机手轮，将送牙布(1)移到针板上方最高处。
2. 放倒缝纫机机头。
3. 旋松螺钉（2）。
4. 旋转上下抬牙叉（3）来调整。
5. 拧紧螺钉（2）。

7-3. 送布牙的角度

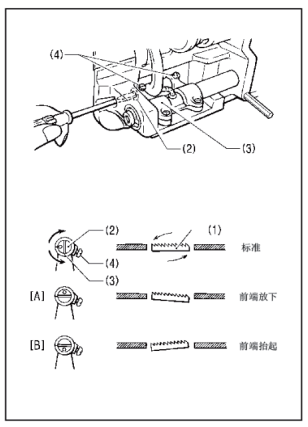

送布牙（1）位于针板最高处时的标准倾斜是牙架曲柄偏心轴（2）上的钢印（0)与牙架曲柄（3）上的标记一致，送布牙（1）与针板平行。
1. 转动缝纫机手轮，将送布牙（1）移到针板上方最高处的位置。
2. 放倒缝纫机机头。
3. 将螺钉（4）[2个]松开。
4. 根据标准位置，在90°的范围内按箭头方向调整牙架曲柄偏心轴（2）。
   ・ 为了防止起皱，可降低送布牙（1）的前端。（图A）
   ・ 为了防止在重叠缝纫时布料不一致[缝线不合]，可抬高送布牙（1）的前端。(图B)
5. 将螺钉（4）[2个]完全拧紧。

[注意]
调整送布牙（1）的倾斜度后，送布牙（1）的高度也会改变，因此请再一次调整送布牙（1）的高度。

7-2.Adjusting the feed dog height

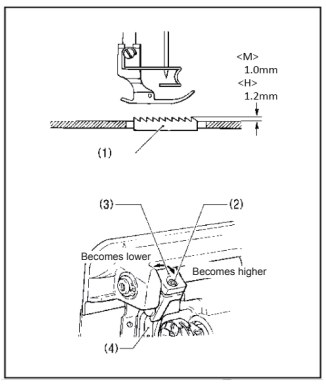

The standard height of the feed dog (1) when it is at its maximum height above the top of the needle plate is 1.0 mm for M specifications, and 1.2mm for H specifications.

1. Turn the pulley until the feed dog (1) rises to the highest Position.
2. Tilt back the machine head.
3. Loosen the screw (2).
4. Move the feed bar(3) up or down to make adjustment.
5. Tighten the screw (2).

7-3.Adjusting the feed dog angle

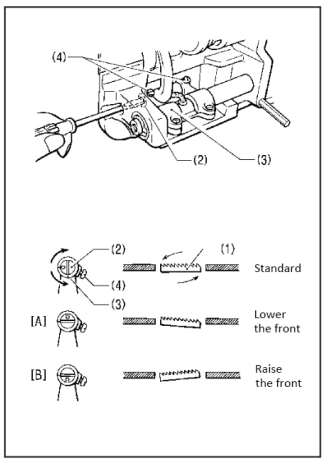

The standard angle for the feed dog (1) when it is at its highest position above the needle plate is when the "O" mark on the shaft (2) is aligned with the feed rocker bracket arm (3) and the feed dog (1) is parallel to the needle plate.

1. Make the machine hand wheel backward, rise the feed dog from lowest position to the same position with needle plate.
2. Tilt back the machine head.
3. Loosen the two set screws (4).
4. Turn the shaft (2) in the direction of the arrow within a range of 90 with respect to the standard position. (Fig.[C]
   In order to prevent puckering, lower the front of the feed dog (1).
   In order to prevent the material from slipping, raise the front of the feed dog (1).
5. Securely tighten the set screws (4),

8. 线张力的调节 Adjusting the thread tension

注 意 CAUTION

取出梭芯套时，请切断电源。
当误踩下踏脚板时，缝纫机动作会导致人员受伤。
Turn off the power switch before removing or inserting the bobbin case.
The machine may operate if the treadle is depressed by mistake, which could result in injury.

正确的针迹 Good even stitches

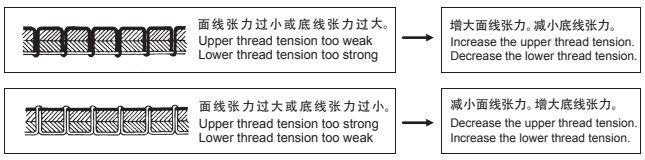

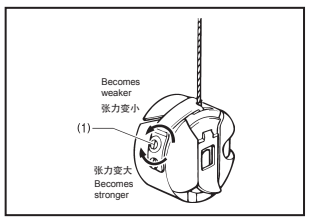

<底线张力>
拉住从梭芯套中露出的线头，转动调节螺钉(1)进行调节直至梭芯套以自重慢慢垂落。

<Lower thread tension>
Adjust by turning the adjustment screw (1) until the bobbin case drops gently by its own weight while the thread end coming out of the bobbin case is held.

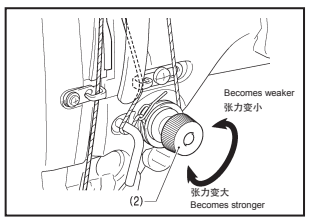

<面线张力>
在底线张力调节之后，调节面线张力以使针脚均匀平整。
1. 降下压脚。
2. 转动夹线螺母(2)进行调节。

<Upper thread tension>
After the lower thread tension has been adjusted, adjust the upper thread tension so that a good, even stitch is obtained.
1. Lower the presser foot.
2. Adjust by turning the tension nut (2).

9.旋梭供油量的调整

注意

在检查旋梭供油量时,手指和油量测试纸不能碰到旋梭和送布机构等运动零部件。
是导致人员受伤的原因。

如更换了旋梭或要变更缝纫速度时，请按下述步骤调整旋梭的供油量。

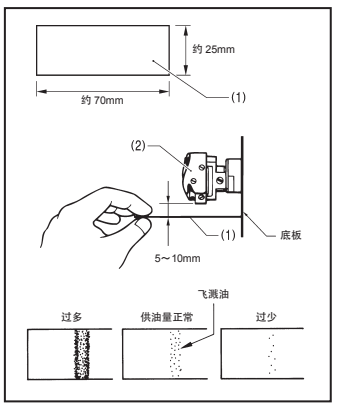

<供油量的确认>
1. 拆去挑线杆至机针上的线。
2. 用抬压脚扳手抬起压脚。
3. 以缝纫机实际缝纫时的转速进行约 10 分钟的空运转(适度的断续运转)。
4. 将油量测试纸(1)插入旋梭(2)的下面并握住，以缝纫机实际进行缝纫时的转速使缝纫机运转 10 秒钟。
(对油量测试纸(1)的纸质没有什么要求。)
5. 确认飞溅到测试纸上的油量。

当需要进行调整时，请按下面(供油量的调整)一节所述进行调整。

[注意]
如果供油量的检查结果不符合左图所示的状态(飞溅到纸上的油迹呈完整的带状或一点也没有飞溅出来)，则请向右转动油量调整螺钉(3)将其完全拧入，然后再向左转动拧出 3 圈半，在松开的状态下进行下述的调整作业。

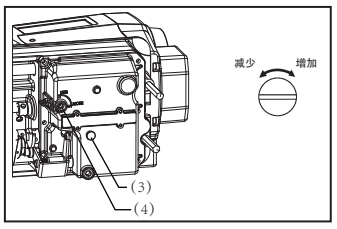

<供油量的调整>
1. 将缝纫机头部倒下。
2. 取出橡皮塞（3）。
3. 转动油量调整螺钉（4），调整供油量。
   ・向右转动油量调整螺钉（3），供油量增加
   ・向左转动油量调整螺钉（3），供油量减少。
4. 参照上述［供油量的确认］所述来检查供油量。
   ＊ 请反复转动油量调整螺钉，进行调整及供油量的确认，直到获得适当的供油量为止。
5. 将橡皮塞装回原处。
6. 在进行了约 2 小时的缝纫后，请再次检查供油量。

9. Adjusting the rotary hook lubrciation amount

CAUTION

Be careful not to touch your fingers or the lubrication amount check sheet against moving parts such as the rotary hook or the feed mechanism when checking the amount of oil supplied to the rotary hook. If care is not taken, injury may result.

Use the following procedure to check the amount of oil being supplied to the rotary hook when replacing the rotary hook or when changing the sewing speed.

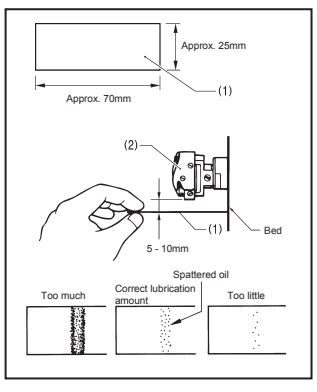

<Checking the lubrication amount>
1. Remove the thread from all points from the thread take-up lever to the needle.
2. Use the lifting lever to lift the presser foot.
3. Run the machine at the normal sewing speed for approximately 10 minutes without sewing any material (following the same start/stop pattern as when actually sewing).
4. Place the lubrication amount check sheet (1) to the left of the rotary hook (2) and hold it there. Then run the sewing machine at the normal sewing speed for 10 seconds.
   (Any type of paper can be used as the lubrication amount check sheet (1).)
5. Check the amount of oil which has spattered onto the sheet.

If adjustment is necessary, carry out the following operations in "Adjusting the lubrication amount".

NOTE:
If the lubrication amount does not match the correct amount shown in the illustration at left (if the amount of spattered oil is too much or none at all), turn the adjusting screw (3) clockwise to fully tighten it, turn it back counterclockwise by 3 1/2 turns, and then carry out the following adjustment.

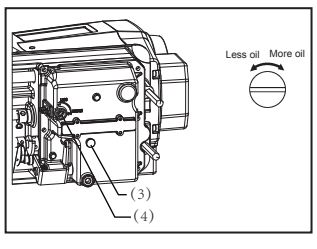

<Adjusting the lubrication amount>
1. Tilt back the machine head.
2. Remove the rubber cap (3).
3. Turn the adjusting screw (4) to adjust the lubrication amount.
   ・If the rotary hook adjusting screw (4) is turned clockwise, the lubrication amount becomes greater.
   ・If the rotary hook adjusting screw (4) is turned counterclockwise, the lubrication amount becomes smaller.
4. Check the lubrication amount again according to the procedure given in "Checking the lubrication amount" above.
   * Turn the rotary hook adjusting screw (4) and check the lubrication amount repeatedly until the lubrication amount is correct.
5. Put the rubber (3) stopper back in place .
6. Check the lubrication amount again after the sewing machine has been used for approximately two hours.

10. 切线

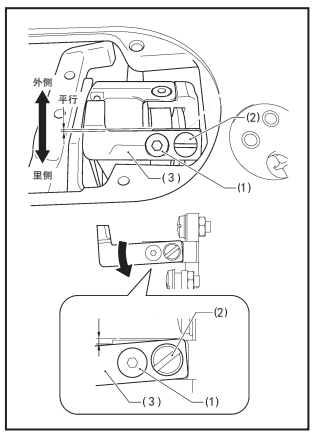

1. 使用粗线或不能切线时，将螺钉（1）和螺钉（2）松开，调整上动刀（3）角度。
2. 上动刀（3）向里侧倾斜时刀面压力上升，向外侧倾斜时刀面压力下降。
3. 调整好上动刀（3）角度后重新拧紧螺钉（1）和螺钉（2）。
4. 调整后请手动上下动刀架，确认是否可以正常切线。

11. 膝控安装

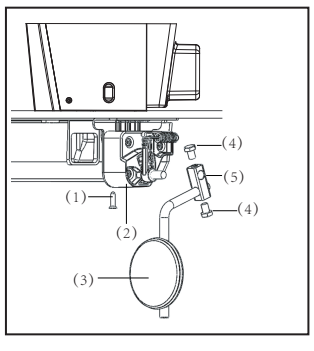

1. 将电子膝靠组件（2）固定在台板上，旋紧固定螺钉（1）。
2. 将膝控组件（3）与膝控接头（5）、电子膝靠组件（2）连接。
3. 拧紧螺钉（4）
4. 安装后检查膝控组件是否灵活。

10. Thread trimming

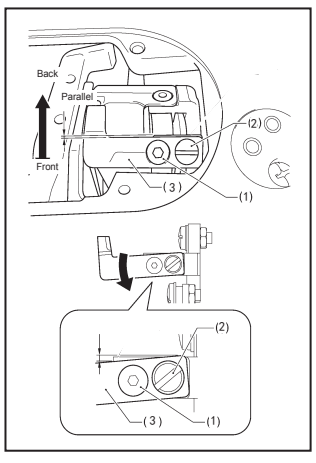

1. When use thick thread or not trim, loosen the screw (1) and (2), adjustment the moving knife (3) angle.
2. Knife (3) tilted to the inside, the knife surface pressure rise. Slanting outward, the knife surface pressure drop.
3. Adjust the knife (3) anger,then re tighten the screw (1) and screw (2).
4. After adjustment, manually move up and down the knife holder to confirm whether the machine can trim thread normally or not.

11. Knee control installation

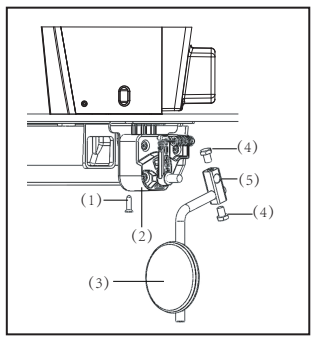

1.The electronic knee assembly (2) is fixed on the plate and the fixed screw (1) is tightened.
2.Connect the knee control assembly (3) with the knee control joint (5) and the electronic knee assembly (2).
3. Tighten the screw (4) .
4. Check whether the knee control is flexible after installation.