零 件 手 册

PARTS BOOK

选购零件部件时，请注明序号，件号。

Please confirm the relative applications Ref. No,part No. when buying the parts.

1. 机体部分/Machine body

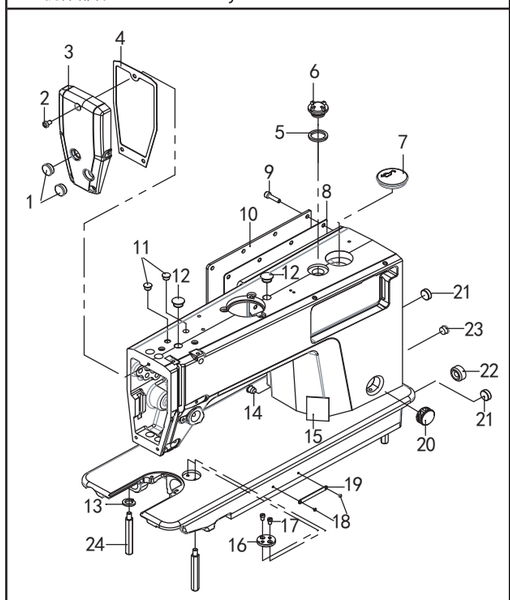

2. 针杆与挑线杆装置/Needle bar and thread take-up mechanism

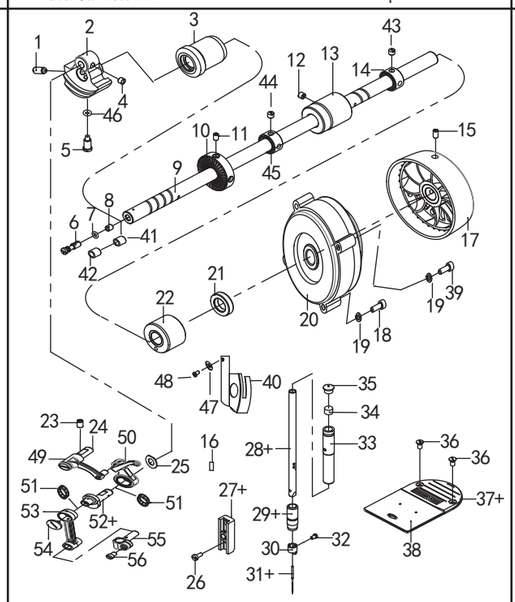

3. 压脚装置/Presser foot mechanism

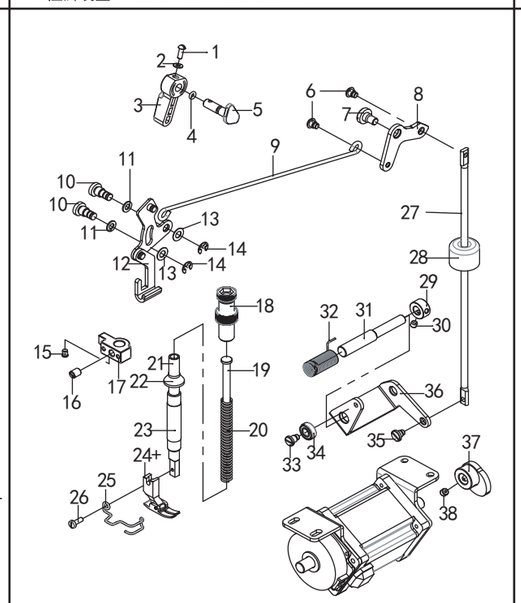

4. 送料装置/Feed mechanism

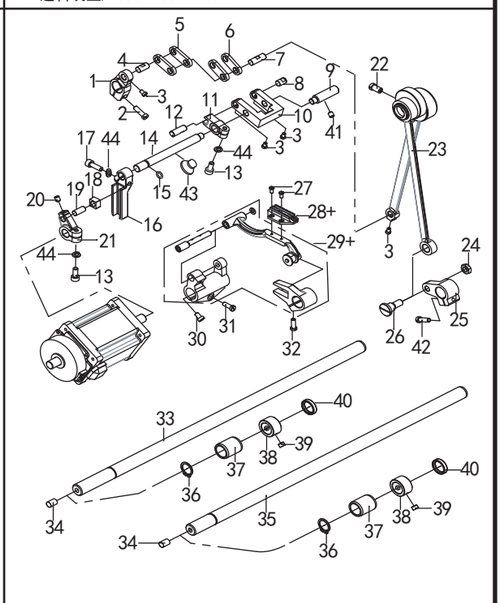

5. 旋梭装置/Rotary shuttle device

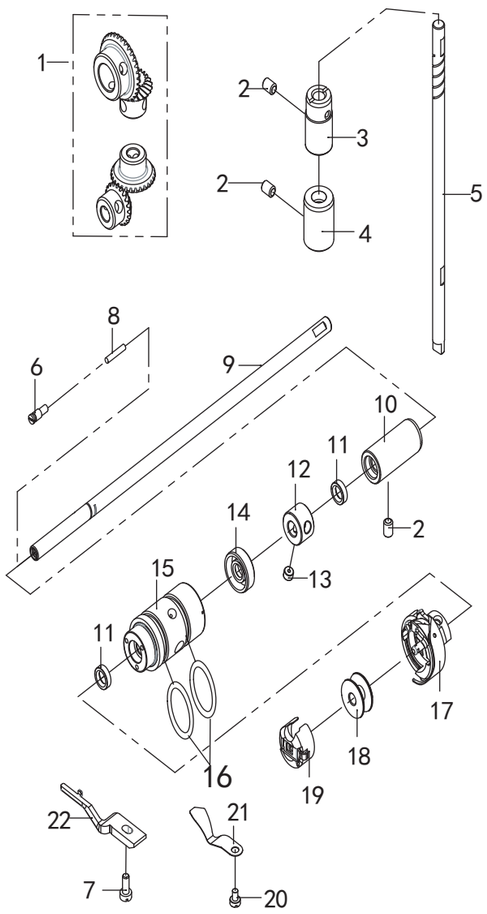

序号	图号	数量	名 称	Name of parts
1	115010701	2	橡皮塞15.5	Rubber stopper 15.5
2	062710812	3	螺钉SM4.76x28-9	Screw SM4.76x28-9
3	168010201	1	面板	Panel
4	168010301	1	面板垫	Panel pad
5	101091001	1	油窗垫片	Oil window gasket
6	101090901	1	油窗	Oil window
7	168010901	1	橡皮塞37.8	Rubber stopper 37.8
8	115010501	1	后窗板衬垫	Rear window panel gasket
9	062501016	12	螺钉 M5x10	Screw M5x10
10	115010401	1	后窗板	Rear window
11	115011401	2	橡皮塞8.5	Rubber stopper 8.5
12	101011001	2	橡皮塞12.5	Rubber stopper 12.5
13	028060246	4	弹簧垫片T6	Spring washer T6
14	101013301	1	孔塞8.8	Kong plug 8.8
15	60634443	1	警告标注	Operation attention mark
16	101012601	1	卷边器座	Crimper holder
17	101013201	2	螺钉SM4.37x40-5.5	Screw SM4.37x40-5.5
18	115012501	2	铆钉	Rivet
19	115012301	1	机器编码	Machine code
20	124120901	1	油量视窗板	Oil volume window panel
21	125013001	2	橡皮塞15.2	Rubber stopper 15.2
22	101011401	1	橡皮塞20.9	Rubber stopper 20.9
23	115011001	1	橡皮塞10.5	Rubber stopper 10.5
24	168011701	4	底板支柱	Floor support

序号	图号	数量	名 称	Name of parts
1	101041303	1	伞齿轮组件	Bevel gear assembly
2	014760832	3	螺钉SM5.95	Screw SM5.95
3	168050302	1	竖轴上轴套	Vertical upper shaft sleeve
4	168050502	1	竖轴下轴套	Vertical lower shaft sleeve
5	101041902	1	竖轴	Vertical axis
6	115071401	1	油盖螺钉	Oil cap screw
7	115072601	1	螺钉SM4.37	Screw SM4.37
8	125043201	1	油芯	Oil wick
9	168051601	1	下轴	Lower shaft
10	168051902	1	下轴后轴套	Lower axle rear bushing
11	115073401	2	油封	Oil seal
12	115072001	1	紧圈	Tight circle
13	014770532	2	螺钉SM6.35	Screw SM6.35
14	115071601	1	油封	Oil seal
15	168051401	1	下轴前套	Lower shaft front sleeve
16	115073301	2	O型圈	O-ring
17	115072312	1	旋梭组件	Rotary shuttle assembly
18	115072401	1	梭芯	Bobbin
19	115072701	1	旋梭套组件	Rotary hook cover assembly
20	101080701	1	螺钉SM3.57	Screw SM3.57
21	125082201	1	分线片	Splitter
22	115072204	1	旋梭定位勾	Hook positioning hook

序号	图号	数量	名 称	Name of parts
1	101031601	1	螺钉SM7.14	Screw SM7.14
2	125031501	1	针杆曲柄	Needle bar crank
3	168020502	1	上轴前轴套	Front sleeve of upper shaft
4	101031701	2	螺钉SM6.35x40-6	Screw SM6.35x40-6
5	101031801	1	螺钉SM7.14	Screw SM7.14
6	101034201	1	油量偏心销	Oil quantity eccentric pin
7	115081601	1	O型圈6.5x1.8	O-ring 6.5x1.8
8	101034301	1	油量销套	Oil quantity pin sleeve
9	166201901	1	上轴	Upper axis
10	101032101	1	绕线驱动轮	Winding drive wheel
11	014500832	2	螺钉M5x8	Screw M5x8
12	014760832	1	螺钉SM5.95x28-8	Screw SM5.95x28-8
13	168020901	1	上轴中轴套	Upper shaft sleeve
14	101032501	1	上轴挡圈	Upper shaft retaining ring
15	012501032	2	螺钉M5x10	Screw M5x10
16	101030601	1	挑线杆防油套	Thread take-up oil sleeve
17	115025302	1	手轮	Handwheel
18	018502532	2	螺钉M5x25	Screw M5x25
19	028050246	4	弹簧垫圈T5	Spring washer T5
20	166210501	1	主轴电机组件	Spindle motor assembly
21	115024001	1	油封	Oil seal
22	168021102	1	上轴后轴套	Rear bushing of upper shaft
23	012061032	1	螺钉M6x10	Screw M6x10
24	101030201	1	挑线连杆销	Thread take-up link pin
25	115021402	1	垫圈8	Washer 8
26	115024601	2	螺钉SM3.57	Screw SM3.57
27+	101043701	1	滑块组件M	Slider component M
27+	101043702	1	滑块组件H	Slider component H
28+	101040401	1	针杆M	Needle bar M
28+	101040402	1	针杆H	Needle bar H
29+	101040901	1	针杆下套M	Needle bar lower sleeve M
29+	101040902	1	针杆下套H	Needle bar lower sleeve H
30	101041101	1	针杆过线环	Needle bar thread loop
31+	115024101	1	机针DBx1 14	Machine needle DBx1 14
31+	115024102	1	机针DPx5 21	Machine needle DPx5 21
32	101041001	1	支针螺钉SM3.18	Needle screw SM3.18
33	101040301	1	针杆上套	Needle bar upper sleeve
34	115025601	1	油毡	Linoleum
35	115010801	1	橡皮塞8.5	Rubber stopper 8.5
36	115023501	2	螺钉SM4.37	Screw SM4.37
37+	115023401	1	针板M	Needle plate M
37+	115023402	1	针板H	Needle plate H
38	101011801	1	推板组件	Push plate assembly
39	018502532	2	螺钉M5x25	Screw M5x25
40	125091301	1	面板防油板	Panel oil-proof plate
41	101034103	1	上轴油毡	Upper axle linoleum
42	101034101	1	上轴油毡	Upper axle linoleum
43	115024801	2	螺钉SM6.35	Screw SM6.35
44	014770632	2	螺钉SM6.35	Screw SM6.35
45	101062901	1	抬牙轴挡圈	Lifting shaft retaining ring
46	115085301	1	O型圈9.3x2.4	O-ring 9.3x2.4
47	101054601	1	平垫圈3.7	Flat washer 3.7
48	101090101	1	螺钉SM3.17x44-4	Screw SM3.17x44-4
49	101030401	1	挑线连杆	Thread take-up link
50	101030501	1	挑线杆	Thread take-up lever
51	101030801	2	滚针轴承	Needle Roller Bearings
52+	101030901	1	挑线曲柄 M	Thread take-up crank M
52+	101030902	1	挑线曲柄 H	Thread take-up crank H
53	101031001	1	针杆连杆	Needle bar link
54	101031101	1	挑线曲柄右旋螺钉	Cank right-hand screw

序号	图号	数量	名 称	Name of parts
55	101031201	1	针杆连接柱	Needle bar connecting column
56	101030701	1	连接柱螺钉	Connecting column screws

序号	图号	数量	名 称	Name of parts
1	101054501	1	螺钉SM3.57x40-9.5	Screw SM3.57x40-9.5
2	101054601	1	垫片3.7	Gasket 3.7
3	168030301	1	抬压脚扳手	Foot lifter
4	081004070	1	O型圈P4	O-ring P4
5	102050601	1	抬压脚凸轮	Presser foot cam
6	115034301	2	轴位螺钉SM4.76	Axis screw SM4.76
7	115034501	1	轴位螺钉SM6.35	Axis screw SM6.35
8	115034601	1	膝控提升手杆	Knee lift handle
9	168030901	1	抬压脚拉杆	Lift the presser foot lever
10	101052001	2	前杠杆螺纹销	Front lever threaded pin
11	101052101	2	防油橡皮垫	Oil-proof rubber pad
12	168031001-1	1	抬压脚前杠杆	Lever of the presser foot
13	101056301	1	垫圈6.35	Washer 6.35
14	048050342	3	卡簧E5	Circlip E5
15	115034201	1	抬压脚减震垫	Presser foot lifting cushion
16	115024801	1	螺钉SM6.35	Screw SM6.35
17	168031801	1	压杆导架	Rod guide
18	168031501	1	调压螺钉组件	Regulating screw asm
19	101050301	1	调压导杆	Pressure regulating rod
20	125050401	1	调压簧	Pressure regulating spring
21	101050501	1	压杆	Pressure bar
22	101050901	1	压杆套防油圈	Rod sleeve oil-proof ring
23	101051001	1	压杆衬套	Compression rod bushing
24+	101051201	1	压脚M	Presser foot M
24+	115030702	1	压脚H	Presser foot H
25	101051301	1	护指器	Finger guard
26	115031001	1	螺钉SM3.57	Screw SM3.57
27	168033701	1	抬压脚顶杆	Presser foot lifter
28	168033601	1	膝控提升杆橡皮塞	Knee lift rod rubber stopper
29	168033501	1	曲柄轴挡圈	Crankshaft retaining ring
30	152201701	2	螺钉SM4.37x40-4	Screw SM4.37x40-4
31	166200902	1	抬压脚曲柄轴	Crank shaft
32	166201402	1	压脚复位簧	Presser foot reset spring
33	166201001	1	轴承轴位螺钉SM4.76	Bearing shaft screw SM4.76
34	169034001	1	轴承	Bearing
35	168031301	1	轴位螺钉SM4.76x32	Axis screw SM4.76x32
36	166200801	1	抬压脚驱动曲柄	Drive crank
37	166201101	1	抬压脚凸轮	Presser foot cam
38	014060632	2	螺钉M6x6	Screw M6x6

序号	图号	数量	名 称	Name of parts
1	101063301	1	送料曲柄	Feed crank
2	101063501	1	螺钉SM4.76	Screw SM4.76
3	101062401	4	螺钉SM3.57	Screw SM3.57
4	101063401	1	送料曲柄销	Feed crank pin
5	101061701	1	曲柄长连杆	Crank long connecting rod
6	101061602	1	曲柄短连杆	Crank short connecting rod
7	101060901	1	送料连杆销	Feeding connecting rod pin
8	101061801	1	摆动板连接销	Swing plate connecting pin
9	168041301	1	切换器右销	Switcher right pin
10	166200101	1	摆动板座	Swing seat
11	166200301	1	摆动座固定夹	Swing seat fixing clip
12	166200701	1	摆动板连接销	Swing plate connecting pin
13	018501432	2	螺钉M5x14	Screw M5x14
14	166200201	1	针距摆动轴	Needle pitch swing axis
15	166201501	1	O型圈9x1.5	O-ring 9x1.5
16	166200401	1	摆动导向曲柄	Swing guide crank
17	018501632	1	螺钉M5x16	Screw M5x16
18	166200402	1	针杆连接柱滑块	Connecting column slider
19	166200601	1	驱动曲柄销	Drive crank pin
20	012500536	1	螺钉M5x5	Screw M5x5
21	166200501	1	倒缝驱动曲柄	Backstitch drive crank
22	101060601	2	偏心轮螺钉	Eccentric screw
23	101060102	1	连杆组件H	Connecting rod assembly H
24	101063701	1	螺母SM5.95	Nut SM5.95
25	101063601	1	抬牙后曲柄	Crank
26	101061101	1	轴位螺钉SM7.14x28	Axis screw SM7.14x28
27	115047001	2	螺钉SM3.18	Screw SM3.18
28+	115046901	1	送料牙M	Feeding teeth M
28+	115046902	1	送料牙H	Feeding teeth H
29+	101062101	1	牙架组件M	Tooth frame componentsM
29+	101062102	1	牙架组件H	Tooth frame componentsH
30	101062601	1	螺钉SM4.37x40-7	Screw SM4.37x40-7
31	101062701	1	螺钉SM4.76	Screw SM4.76
32	101064001	1	螺钉SM4.37x40-12	Screw SM4.37x40-12
33	168042601	1	送布轴	Feed shaft
34	115082801	6	油毡	Linoleum
35	168043901	1	抬牙轴	Lift the tooth shaft
36	048140142	2	挡圈C14	Retaining ring C14
37	101063102	2	送布轴前轴套	Front sleeve of feed shaft
38	101062901	2	送布轴挡圈	Feed shaft retaining ring
39	101063001	4	螺钉SM6.35	Screw SM6.35
40	166201601	2	油封14x18.5x5	Oil seal 14x18.5x5
41	101032401	1	螺钉SM5.95	Screw SM5.95
42	103043501	1	螺钉SM4.76x28-14	Screw SM4.76x28-14
43	101050901	1	压杆套防油圈	Rod sleeve oil-proof ring
44	028050246	3	弹簧垫圈 T5	Spring washer T5

6 . 供油润滑装置/Lubrication

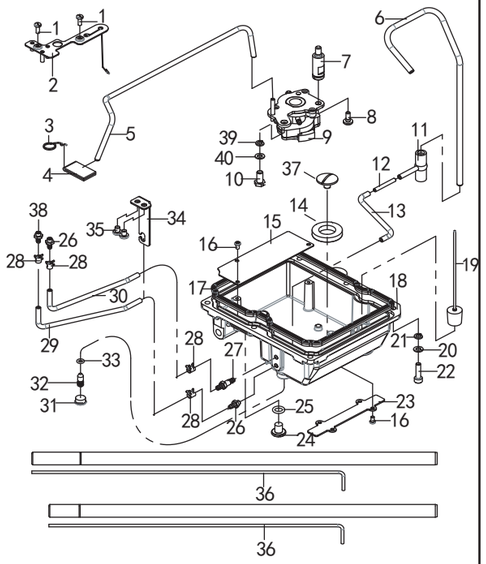

序号	图号	数量	名 称	Name of parts
1	115031001	2	螺钉SM3.57	Screw SM3.57
2	101090701	1	油线固定板	Oil line fixing plate
3	101090601	1	油毡夹	Linoleum clip
4	101090301	1	油毡	Linoleum
5	5040202	1	尼龙油管3.2	Nylon tubing 3.2
6	101091801	1	上轴供油管	Upper shaft oil supply pipe
7	101091601	1	油泵连接螺钉	Oil pump connecting screw
8	115072601	1	螺钉SM4.37	Screw SM4.37
9	168061401	1	油泵组件	Oil pump components
10	101074701	1	螺钉SM5.95	Screw SM5.95
11	101091701	1	供油管接头	Oil supply pipe joint
12	125092201	1	铝管接头	Aluminum pipe joint
13	5040202	1	尼龙油管3.2	Nylon tubing 3.2
14	5050951	1	磁铁	Magnet
15	168062002	1	油盒盖	Oil box cover
16	062350616	7	螺钉 M3.5x6	Screw M3.5x6
17	168061802	1	油盒密封圈	Oil box sealing ring
18	168062111	1	油盒	Oil box
19	180085401	1	浮球组件	Float assembly
20	028050246	6	弹簧垫片T5	Spring washer T5
21	025050132	6	垫圈5	Washer 5
22	018502032	6	螺钉M5x20	Screw M5x20
23	124123201	1	电线压板	Wire pressure plate
24	115080901	1	放油螺钉M8	Oil drain screw M8
25	168063001	1	O型圈13x2.4	O-ring 13x2.4
26	115080401	3	供油口	Oil supply port
27	168062601	1	供油口	Oil supply port
28	115085501	4	油管夹	Tubing clamp
29	5040202	1	尼龙油管（进油）	Nylon tubing (oil inlet)
30	5040202	1	尼龙油管（出油）	Nylon tubing (oil out)
31	115011001	1	橡皮塞10.5	Rubber stopper 10.5
32	115081501	1	调节螺钉	Adjusting screw
33	081004870	2	O型圈6.5x1.5	O-ring 6.5x1.5
34	169080101	1	油管支架	Tubing bracket
35	062500816	2	螺钉SM5x8	Screw SM5x8
36	101092201	1	油线	Oil line
37	125103901	1	磁铁安装螺钉	Magnet Mounting Screw
38	125101802	1	供油嘴	Fuel nozzle
39	028060246	1	弹簧垫片T6	Spring washer T6
40	101075101	1	平垫片6	Flat gasket 6

7. 穿线装置/Threading device

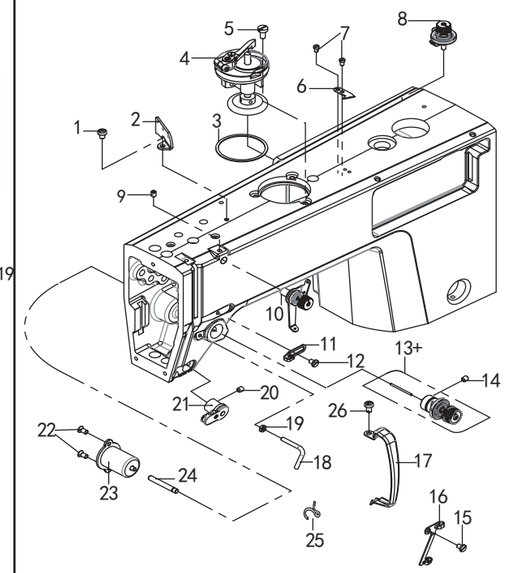

序号	图号	数量	名 称	Name of parts
1	101010901	2	螺钉SM4.76	Screw SM4.76
2	115090301	1	穿线板	Threading board
3	168072901	1	绕线器密封圈	Winder assembly
4	101022501	1	底线绕线器	Winder gasket
5	101022601	3	螺钉 M5x10	Screw M5x10
6	101022701	1	割线刀	Secant knife
7	101022801	2	螺钉SM3.57	Screw SM3.57
8	168072101	1	绕线器夹线组件	Winder wire clamping asm
9	101022201	1	螺钉SM4.76	Screw SM4.76
10	168072201	1	调线夹线器组件	Thread adjuster assembly
11	101020701	1	右线勾	Right line hook
12	101020201	1	螺钉SM4.37x40-6	Screw SM4.37x40-6
13+	166202201	1	夹线器组件M	Thread clamp assembly M
13+	166202202	1	夹线器组件H	Thread clamp assembly H
14	101020401	1	螺钉SM5.95x28-7	Screw SM5.95x28-7
15	125022201	1	螺钉M4x6	Screw M4x6
16	180090201	1	面板线勾	Panel hook
17	101010801	1	挑线杆防护罩	Protective cover
18	101020502	1	大线勾	Big hook
19	115111601	1	螺母 SM4.37	Nut SM4.37
20	013760532	1	螺钉SM5.95x28-5	Screw SM5.95x28-5
21	102020101	1	电子夹线器	Electronic clamp
22	062400612	2	螺钉M4x6	Nut M4x6
23	166201701	1	松线电磁铁组件	Loose wire solenoid asm
24	169201801	1	松线销	Loose pin
25	11509140	1	线导向	Line guide
26	062710812	1	螺钉SM4.76x28-9	Screw SM4.76x28-9

8. 切线装置/Thread cutting device

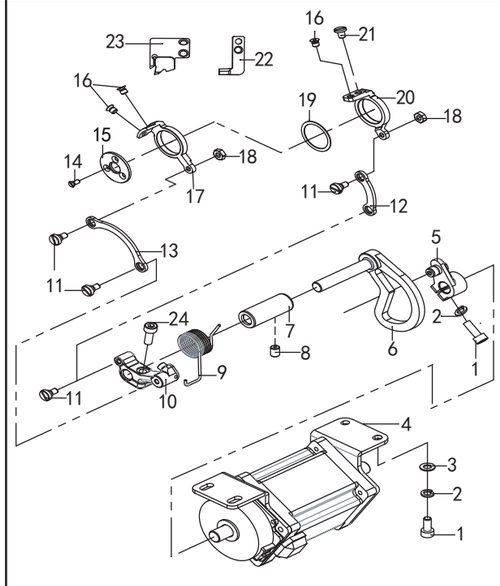

序号	图号	数量	名 称	Name of parts
1	018501432	6	螺钉 M5x14	Screw M5x14
2	028050246	5	弹簧垫片T5	Spring washer T5
3	025050132	4	垫圈5	Washer 5
4	166210201	1	步进电机组件	Stepper motor components
5	169110102	1	切线驱动曲柄	Tangent drive crank
6	166201201	1	切线曲柄	Tangent crank
7	125082401	1	切刀轴套	Cutter bush
8	014760832	1	螺钉SM5.95	Screw SM5.95
9	125082301	1	动刀复位簧	Moving knife reset spring
10	125082101	1	切线曲柄	Tangent crank
11	125080601	4	螺钉M4	Screw M4
12	125081901	1	刀架短连杆	Short connecting rod
13	125082001	1	刀架长连杆	Long connecting rod
14	125080401	3	螺钉 M3x5	Screw M3x5
15	125082501	1	动刀压板	Moving knife pressure plate
16	115111301	3	螺钉SM4.37	Screw SM4.37
17	125081701	1	下刀架	Lower tool holder
18	021400306	2	螺母 M4	Nut M4
19	125081801	1	垫圈	washer
20	125081601	1	上刀架	Upper tool holder
21	125080501	1	螺钉SM4.37	Screw SM4.37
22	125081401	1	上动刀	Upper moving knife
23	125081501	1	下动刀	Move the knife down
24	101081901	1	螺钉SM4.76	Screw SM4.76

9. 倒缝开关装置/Back seam switch device

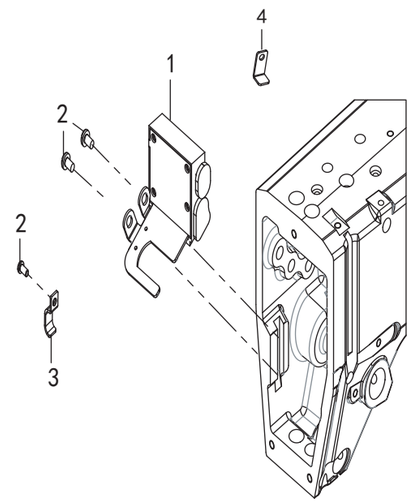

序号	图号	数量	名 称	Name of parts
1	166300101	1	LED倒缝开关组件	LED reverse seam switch asm
2	062500616	4	螺钉M5×6	Screw M5×6
3	115114801	2	电线夹U2	Wire clamp U2
4	102110302	2	电线压板	Wire clamp

10. 控制箱装置/Control box device

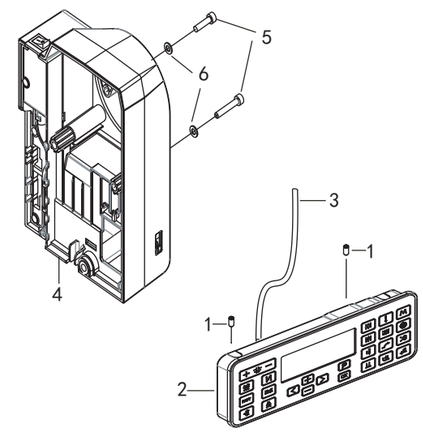

序号	图号	数量	名 称	Name of parts
1	014500832	2	螺钉 M5x8	Screw M5x8
2	166210311	1	显示屏	Operation box components
3	166210402	1	显示屏信号线	Signal line
4	166210111	1	电控箱	Electric cabinet
5	101011701	4	螺钉 M5x35	Screw M5x35
6	025050132	4	平垫圈5	Flat washer 5

11. 附件/Accessories

序号	图号	数量	名 称	Name of parts
1	115072401	3	梭芯	Bobbin
2	115024112	10	机针DBX1—(#14)	Machine needle DBX1—(#14)
3	125120801	2	头部防震垫	Head shock pad
4	115150401	2	机头铰链	Head hinge
5	101120501	2	机头铰链套	Head hinge sleeve
6	125120601	2	头部防震垫	Head shock pad
7	5050111	4	鞋钉	Shoe spikes
8	102120101	1	机头支柱	Head support
9	115151001	1	中号油壶	Medium oil can
10	166202102	2	托盘长支架	The tray support
11	115151401	1	线架组件2DR	Wire rack assembly 2DR
12	6040201	1	机头罩	Hoodl
13	115151701	1	螺丝刀(中)	Screwdriver (medium)
14	166210701	1	连杆组件	Connecting rod assembly
15	166202001	1	托盘主体	Tray
16	115151601	1	螺丝刀(小)	Screwdriver (small)
17	5040104	3	尼龙扎带 3x100	Nylon cable tie 3x100
18	152208101	12	木螺钉	Wood screws
19	169053020	1	电子膝靠组件	Electronic knee rest
20	166210601	1	控速器	Speed controller
21	166210801	1	电源线	Power line
22	115151801	1	螺丝刀(大)	Screwdriver (large)

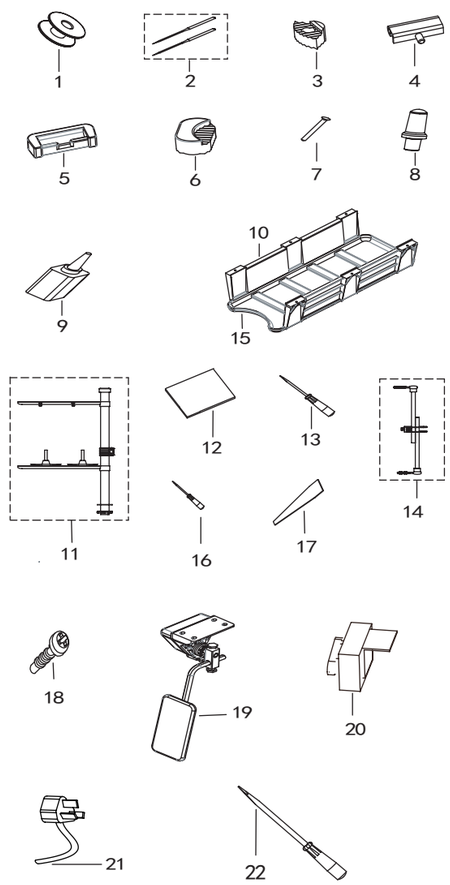

12. 电子膝靠/Electronic knee rest

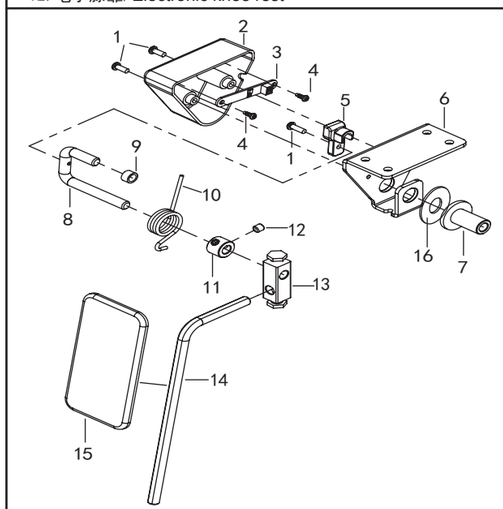

序号	图号	数量	名 称	Name of parts
1	062401217	3	螺钉M4×12	Screw M4×12
2	169053011	1	膝提电路板罩	Knee lifter circuit board cover
3	166211601	1	膝控电路板组件	Induction circuit board
4	115082602	2	螺钉ST3x6	Screw ST3x6
5	169053012	1	磁铁安装座	Magnet mount
6	169050211	1	膝控支架	Knee lifter support
7	169053009	1	膝控轴限位套	Stop collar
8	169053010	1	膝控铰链弯轴	Knee lifter cambered axle
9	169053013	1	膝控减震圈	Knee lifter damping ring
10	169053015	1	膝控弹簧	Knee lifter spring
11	169053014	1	紧圈	Tight circle
12	014600532	2	螺钉SM6.35	Screw SM6.35
13	169053007	1	膝控短接头	Knee control sub
14	169053006	1	膝控铰链长轴	Knee hinge long axis
15	169053004	1	膝靠	Knee lifter
16	169053016	1	垫圈	Washer